ASHRAE Guideline 36

- Best of Class HVAC Control Sequences



TRANE TECHNOLOGIES

Agenda

- Purpose and Scope
- Trim and Respond
- Alarming and Fault Detection
- General Zone Logic

Guideline Adoption

- Guideline published January - 2018
- Draft sequences are showing up in some specifications, especially in California
- State of Washington Energy Code - 2015
- Taylor Engineering has been putting on seminars with Pacific Energy Center based on RP-1455
- Many ASHRAE chapters are discussing the guideline in monthly meetings

Purpose

"The purpose of this guideline is to provide uniform sequences of operation for heating, ventilating, and air-conditioning (HVAC) systems that are intended to maximize HVAC system energy efficiency and performance, provide control stability, and allow for real-time fault detection and diagnostics."[1]

- ✓ Reduce Engineering time
- ✓ Reduce Programming and Commissioning time
- ✓ Reduce Energy Consumption
- ✓ Improve Indoor Air Quality
- ✓ Reduce System Downtime by Including Fault Detection Diagnostic Algorithms

1. ASHRAE, *ANSI/ASHRAE* Guideline 36-2018 -- High-Performance Sequences of Operation for HVAC Systems. 2018, American Society of Heating, Refrigerating, and Air-Conditioning Engineers, Inc.: Atlanta, GA.

Goals of Guideline 36

- Manufacturers preprogram and debug all the sequences for their dealers
- Engineers just spec “Use ASHRAE Guideline 36 sequences”
  - Perhaps with special adjustments unique to project
- Control contractors simply use the preprogrammed sequences, adjusted where specified.
- Commissioning agents use the functional performance tests (FPTs) included w/Guideline 36
  - Possibly even forgo FPTs once they are comfortable that manufacturers have programmed them correctly

Scope

- Sequences of Operations
  - Unit Level
  - System Level (Optimization)
    - Fan Pressure Optimization
    - Demand Controlled Ventilation
    - DAT Reset
- Points Lists
- Diagnostics (Including Automatic Fault Detection)
- Alarm Management
- Functional Performance Tests (Future)

System Types Addressed

- Multiple Zone VAV
  - Single Duct
  - Dual Duct
- Single Zone VAV
- Additional systems added as research is completed (Chiller Plants, Boiler Plants, etc…)
  - RP-1711- Phase II Central Plants and Hydronic Systems – Research in progress.
  - WS-1865 - Optimizing Supply Air Temperature Control for Dedicated Outside Air Systems

Sequences of Operation

5 Sequences of Operations 16
5.1 General 16
5.2 Generic Ventilation Zones 24
5.3 Generic Thermal Zones 29
5.4 Zone Groups 31
5.5 VAV Terminal Unit—Cooling Only 33
5.6 VAV Terminal Unit with Reheat 34
5.7 Parallel Fan-Powered Terminal Unit—Constant-Volume Fan 37
5.8 Parallel Fan-Powered Terminal Unit—Variable-Volume Fan 39
5.9 Series Fan-Powered Terminal Unit—Constant-Volume Fan 42
5.10 Series Fan-Powered Terminal Unit—Variable-Volume Fan 44
5.11 Dual-Duct VAV Terminal Unit—Snap Acting Control 46
5.12 Dual-Duct VAV Terminal Unit—Mixing Control with Inlet Airflow Sensors 49
5.13 Dual-Duct VAV Terminal Unit—Mixing Control with Discharge Airflow Sensor 51
5.14 Dual-Duct VAV Terminal Unit—Cold-Duct Minimum Control 53
5.15 Air-Handling Unit System Modes 55
5.16 Multiple-Zone VAV Air-Handling Unit 55
5.17 Dual-Fan Dual-Duct Heating VAV Air-Handling Unit 72
5.18 Single-Zone VAV Air-Handling Unit 74

Standards Addressed

- ASHRAE 90.1 (Energy)
- ASHRAE 62.1 (Indoor Environmental Quality)
- Title 24 (California Energy and IEQ)

Key Concepts

- Optimization Strategies driven by a weighted voting scheme with Trim and Respond methodology

- Focus on providing hooks for commissioning agents to properly exercise the specified sequences of operation
  - Point override capability
  - Test Mode – remove alarm delays

- Automated Fault Detection and Hierarchical Alarm Suppression as a means of improving system performance

Please Remember!!!

- **5.1.1** These sequences are intended to be performance based. Implementations that provide the same functional result using different underlying detailed logic will be acceptable.

- FPTs will demonstrate that the sequences were properly implemented by testing performance, rather than verification of the detailed logic.
  - May be difficult to verify before FPTs are developed

TRIM AND RESPOND SETPOINT RESET

Trim and Respond Setpoint Reset

- Trim and Respond is a feedback loop control method

- Intended to be a hunting loop with no “sweet spot”
  - Seeking balance between comfort and energy efficiency

Trim and Respond Setpoint Reset

Table 5.1.14.3 Trim & Respond Variables

Variable	Definition
Device	Associated device (e.g., fan, pump)
SP0	Initial set point
SPmin	Minimum set point
SPmax	Maximum set point
Td	Delay timer
T	Time step
I	Number of ignored requests
R	Number of requests from zones/systems
SPtrim	Trim amount
SPres	Respond amount (must be opposite in sign to SPtrim)
SPres-max	Maximum response per time interval (must be same sign as SPres)

Trim and Respond Setpoint Reset

- Zones issue “requests” based on a set of rules
  - E.g. “Generate 1 request when damper position exceeds 95%”
- Multiply “requests” by Importance Multiplier
- Set how many requests to ignore before responding
  - If requests ≤ ignores, system will “trim” to more energy efficient value
  - If requests > ignores, system will “respond” proportionally to requests

Trim and Respond Setpoint Reset

- If R ≤ I
  - SP = SP* + SPtrim
- If R > I
  - SP = SP* +(R-I) x SPres, but not larger than SPres-max

I	Number of ignored requests
R	Number of requests from zones/systems
SPtrim	Trim amount
SPres	Respond amount (must be opposite in sign to SPtrim)
SPres-max	Maximum response per time interval (must be same sign as SPres)

Trim & Respond Optimization

Air Handler Static Pressure Optimization

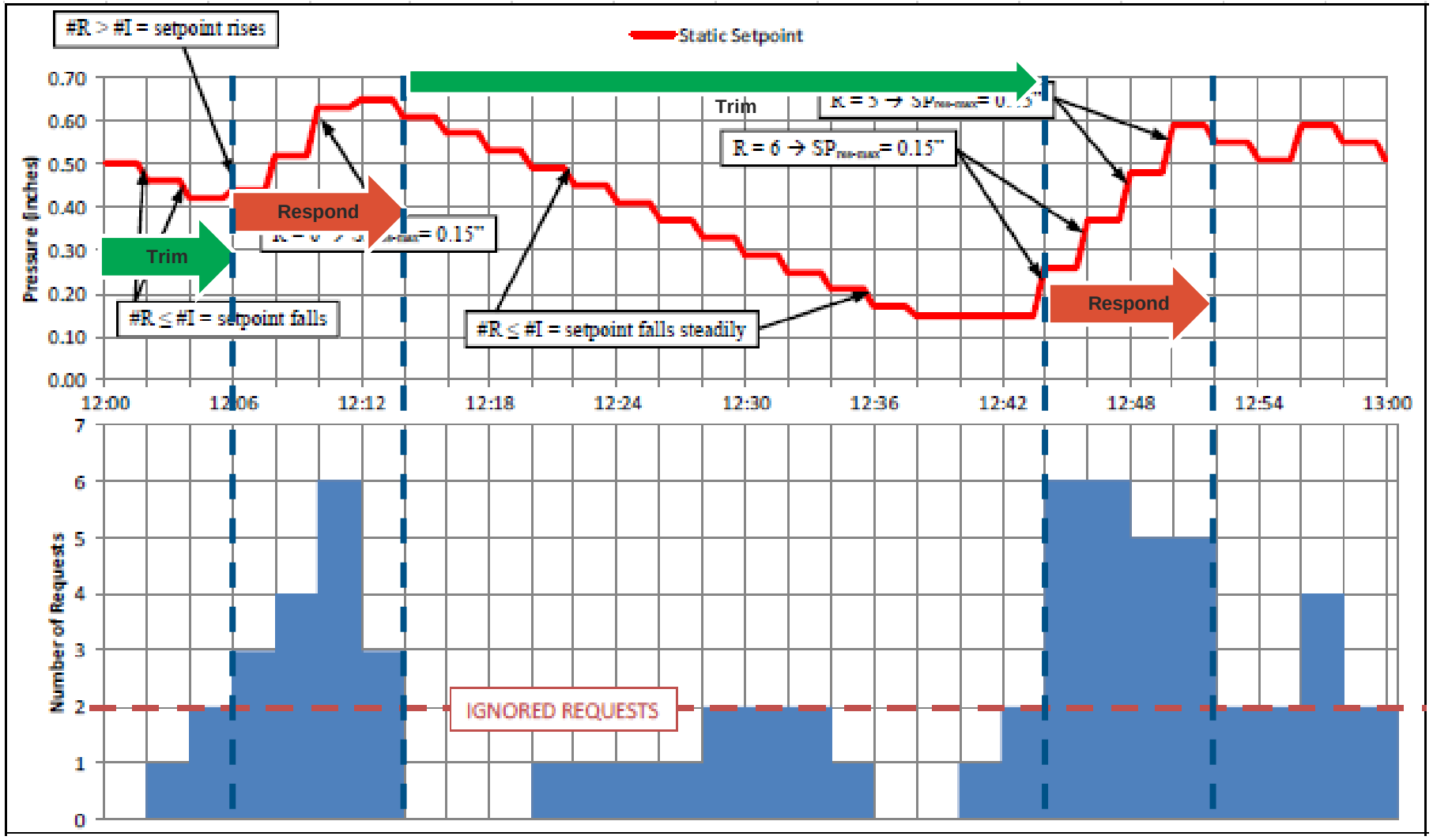

Trim and Respond Advantages

- More stable and easier to tune than PID
- Can trim slowly and respond quickly
  - PID moves at same rate
- Easy to identify and adjust for rogue zones
- Control the importance of each individual zone
- Generate requests nonlinearly based on criteria
- Can be utilized for several reset strategies

Trim and Respond Examples

- Trim to a more energy efficient setpoint
  - Trim is not always a decrease in value!!
- Respond to satisfy comfort

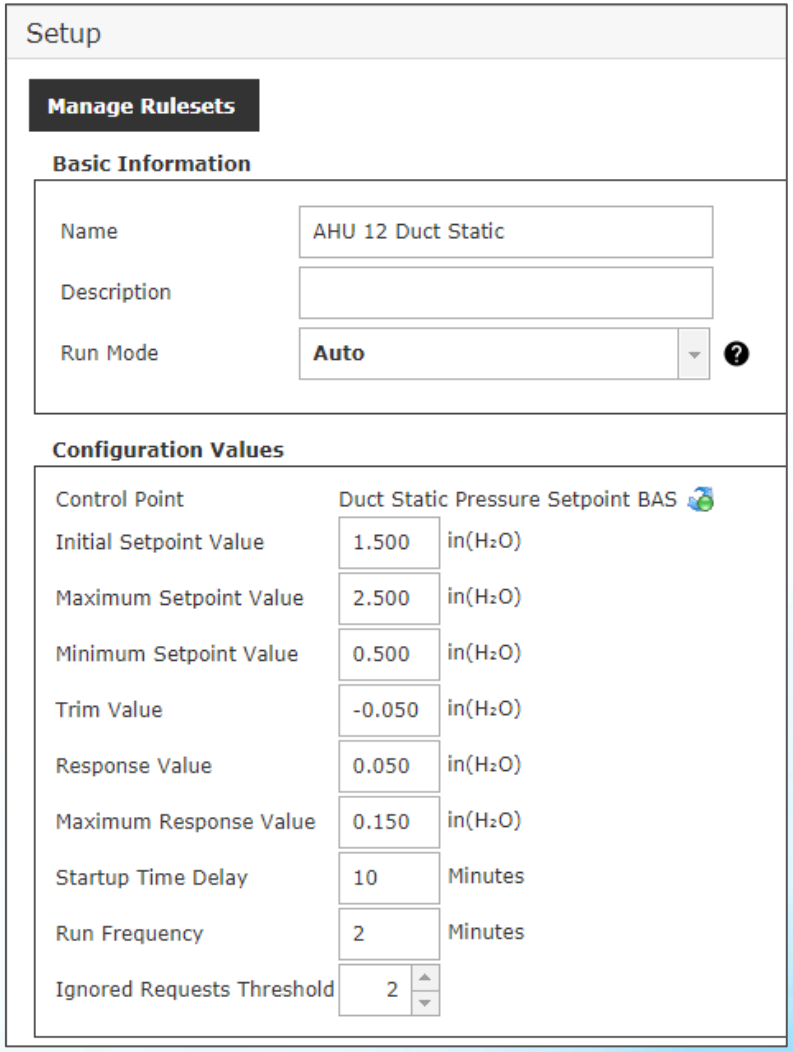

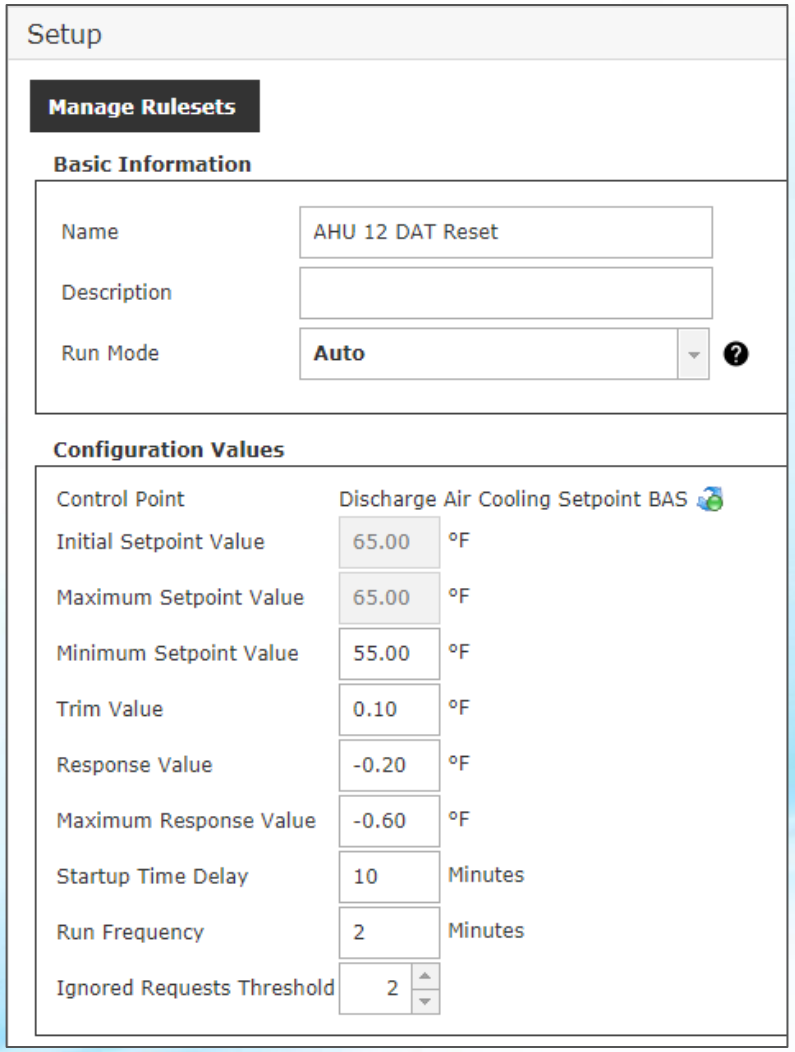

ALARMING AND FAULT DETECTION

Hierarchical Alarm Suppression

- Intended to minimize nuisance alarms at the zones from failure of central equipment
- Example: If a fan fails at an AHU, the zones served by the AHU will have certain alarms suppressed
  - Suppress low airflow alarms, space temp alarms, high CO2 alarms, etc.
- This can be used for hydronic and air systems
  - Define the relationships between equipment in each system in terms of “Source” and “Load”
  - Suppress the “Load” alarms when the “Source” is in fault

When are alarms suppressed?

- Each System will have a “SystemOK” flag which is either True or False
  - SystemOK shall be True when:
    - System is proven on
    - System is achieving design setpoint(s) for at least 5 minutes
    - System is ready and able to serve its load
- When SystemOK is True, load alarms are NOT suppressed
- When SystemOK is False, load alarms are suppressed

When to utilize alarm suppression

- This logic may not be applicable in smaller systems

- Example: System with one boiler and one AHU
  - Boiler failure would only suppress the single AHU alarm
  - Still implement for VAVs?

Hierarchical Alarm Suppression

Alarms: None

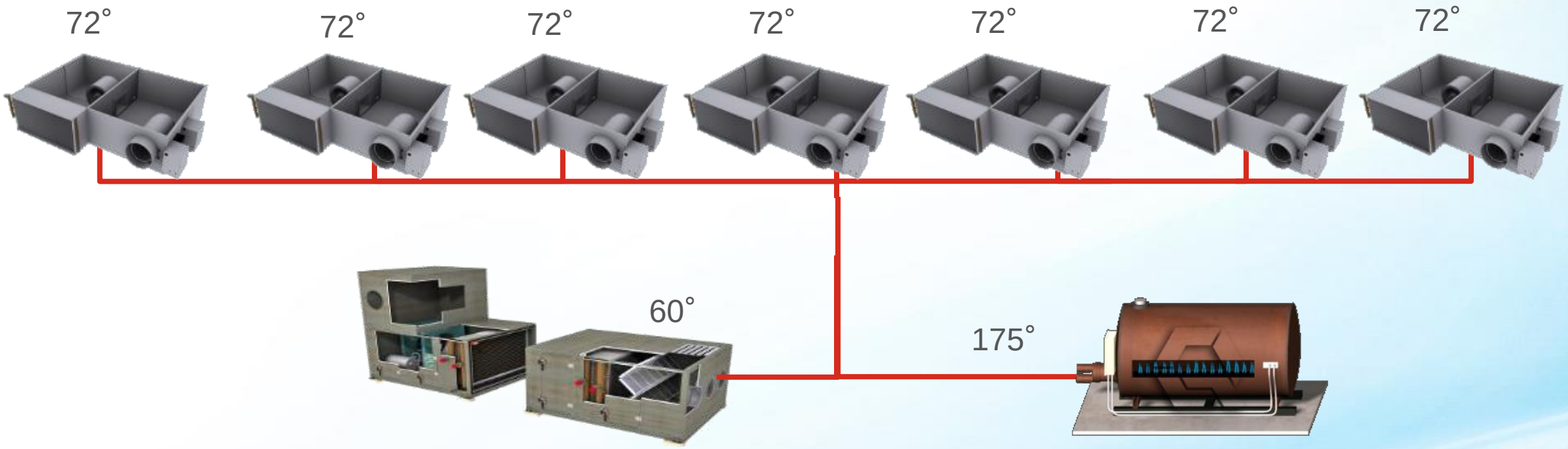

Hierarchical Alarm Suppression

Alarms: ????

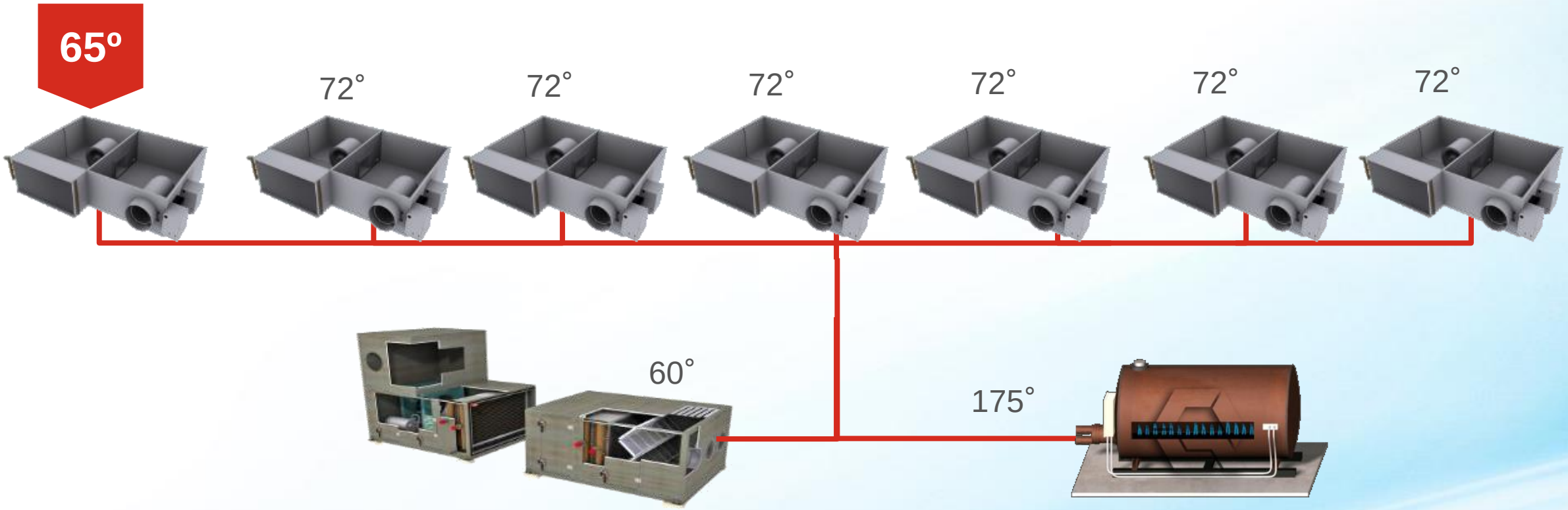

Hierarchical Alarm Suppression

Alarms: Space Temp Alarm

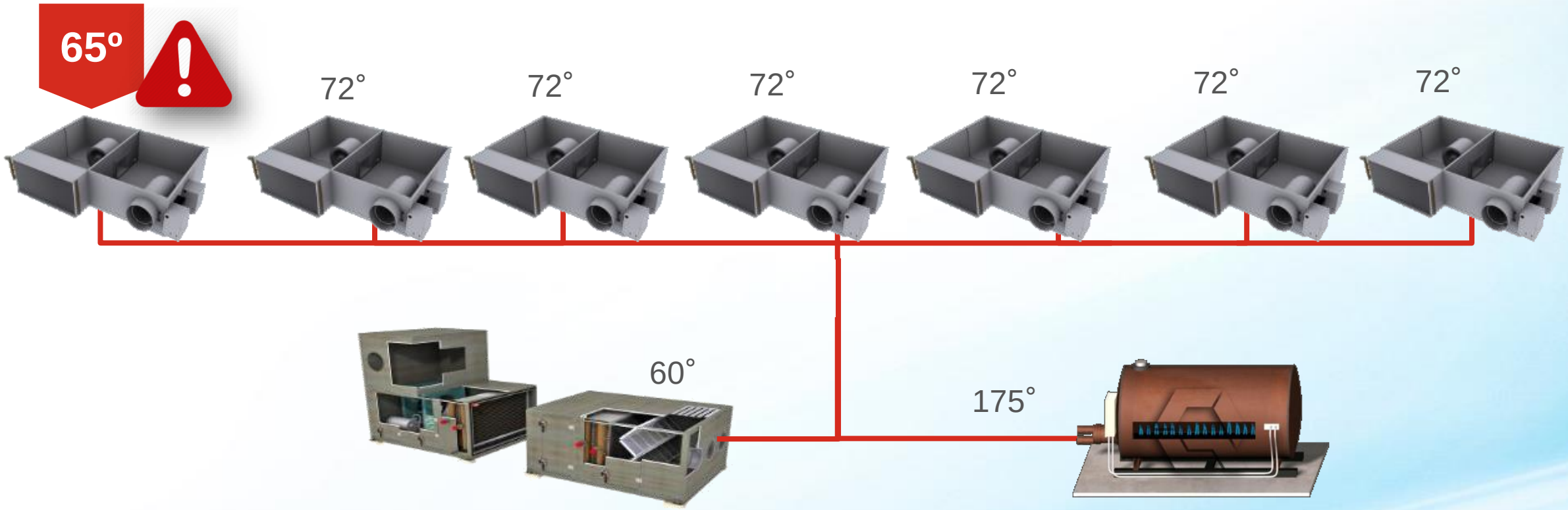

Hierarchical Alarm Suppression

Alarms: ????

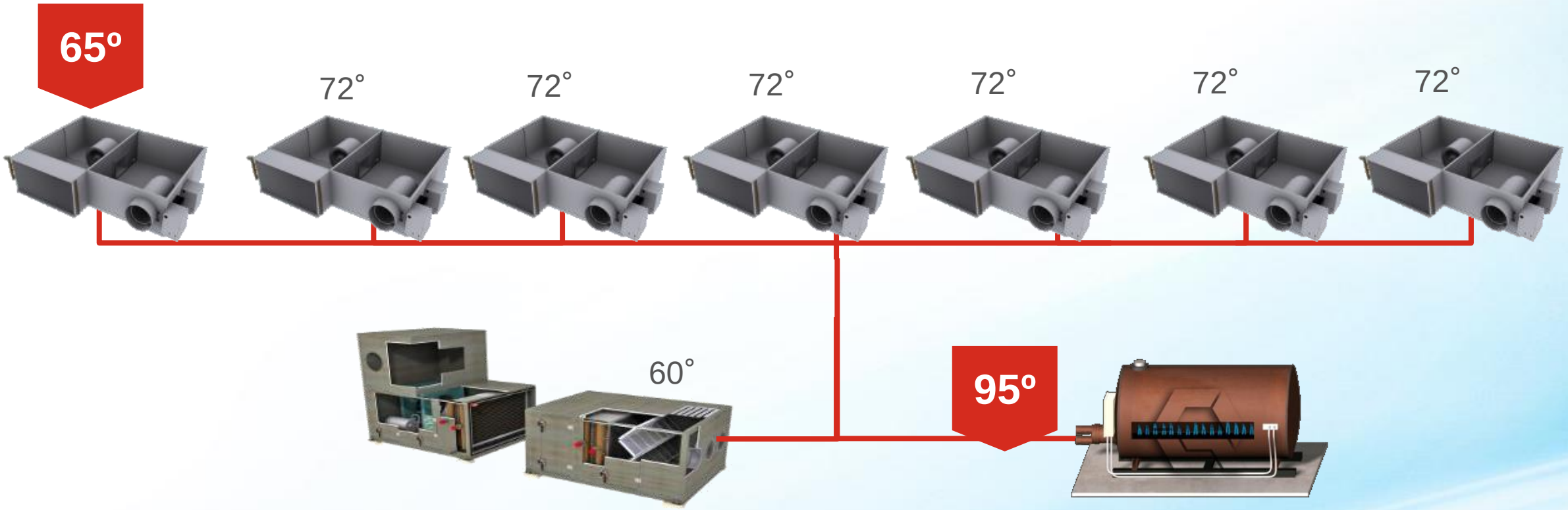

Hierarchical Alarm Suppression

Alarms: Space Temp Alarm and Low Boiler Temp Alarm

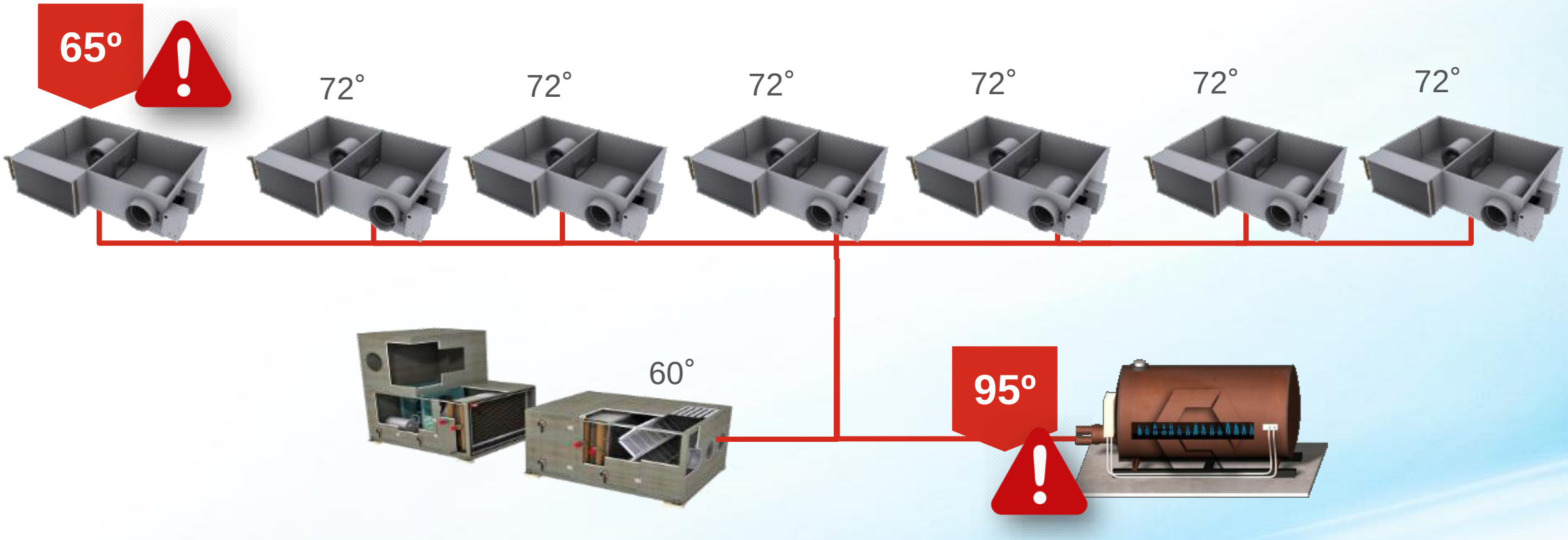

Hierarchical Alarm Suppression

Alarms: ????

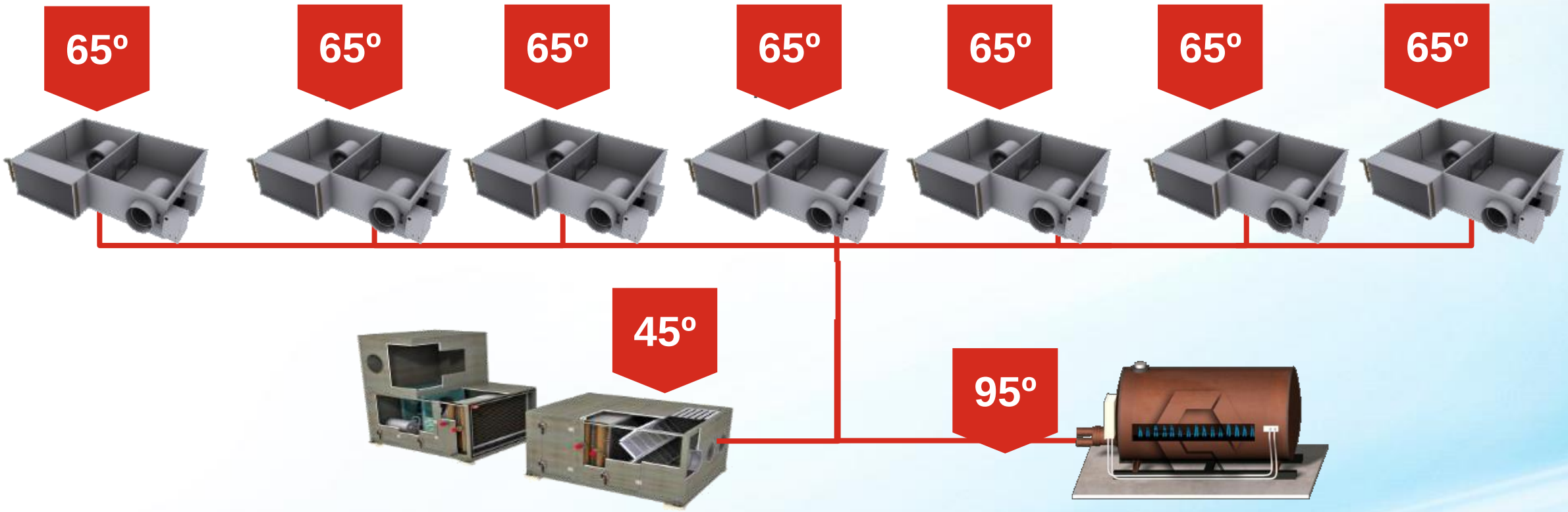

Hierarchical Alarm Suppression

Alarms: Space Temp Alarm and Low Boiler Temp Alarm

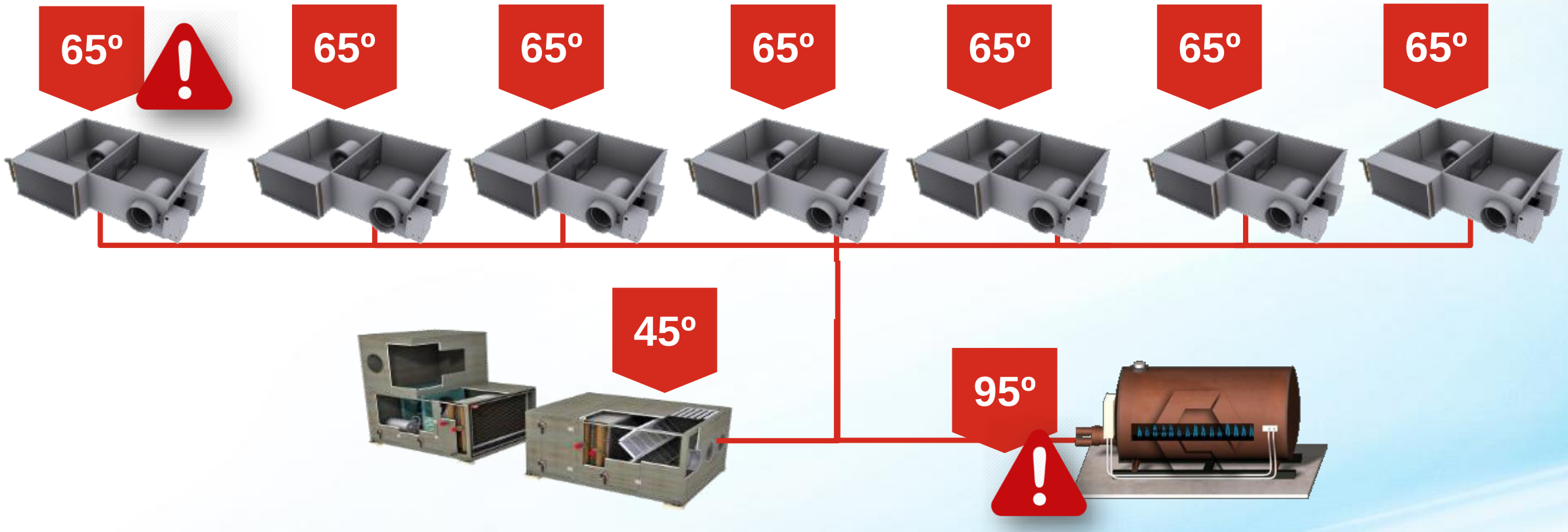

Automated Fault Detection

- Based on NIST research and tested on several sites as part of RP-1455
- 15 “rules” that can be evaluated
  - Only for AHUs
  - Based on mass/energy balance equations
  - Each Fault Condition specifies:
    - Performance assessment: if equation is true, there is a fault
    - Operating state(s) when fault condition is evaluated
    - Likely causes of fault
- Designed to minimize false alarms
  - Assumes typical sensor error
  - Utilize rolling averages to smooth input spikes

Example Fault Conditions

Table 5.16.14.6 VAV AHU Fault Conditions

FC#1	**Equation**	$DSP < DSPSP - \varepsilon DSP$ **AND** $VFDSPD \geq 99\% - \varepsilon VFDSPD$	**Applies to OS#1 through OS#5**
	Description	Duct static pressure too low with fan at full speed	
	Possible Diagnosis	• Problem with VFD • Mechanical problem with fan • Fan undersized • SAT set point too high (too much zone demand)	
FC#2 (omit if no MAT sensor)	**Equation**	$MATavg + \varepsilon MAT < \min[(RATavg - \varepsilon RAT), (OATavg - \varepsilon OAT)]$	**Applies to OS#1 through OS#5**
	Description	MAT too low; should be between OAT and RAT	
	Possible Diagnosis	• RAT sensor error • MAT sensor error • OAT sensor error	
FC#3 (omit if no MAT sensor)	**Equation**	$MATavg - \varepsilon MAT > \max[(RATavg + \varepsilon RAT), (OATavg + \varepsilon OAT)]$	**Applies to OS#1 through OS#5**
	Description	MAT too high; should be between OAT and RAT	
	Possible Diagnosis	• RAT sensor error • MAT sensor error • OAT sensor error	

Example Fault Conditions

Table 5.16.4.2 VAV AHU Operating States

Operating State	Heating Valve Position	Cooling Valve Position	Outdoor Air Damper Position
#1: Heating	> 0	= 0	= min
#2: Free cooling, modulating OA	= 0	= 0	min < x < 100%
#3: Mechanical + economizer cooling	= 0	> 0	= 100%
#4: Mechanical cooling, minimum OA	= 0	> 0	= min
#5: Unknown or dehumidification	No other OS applies		

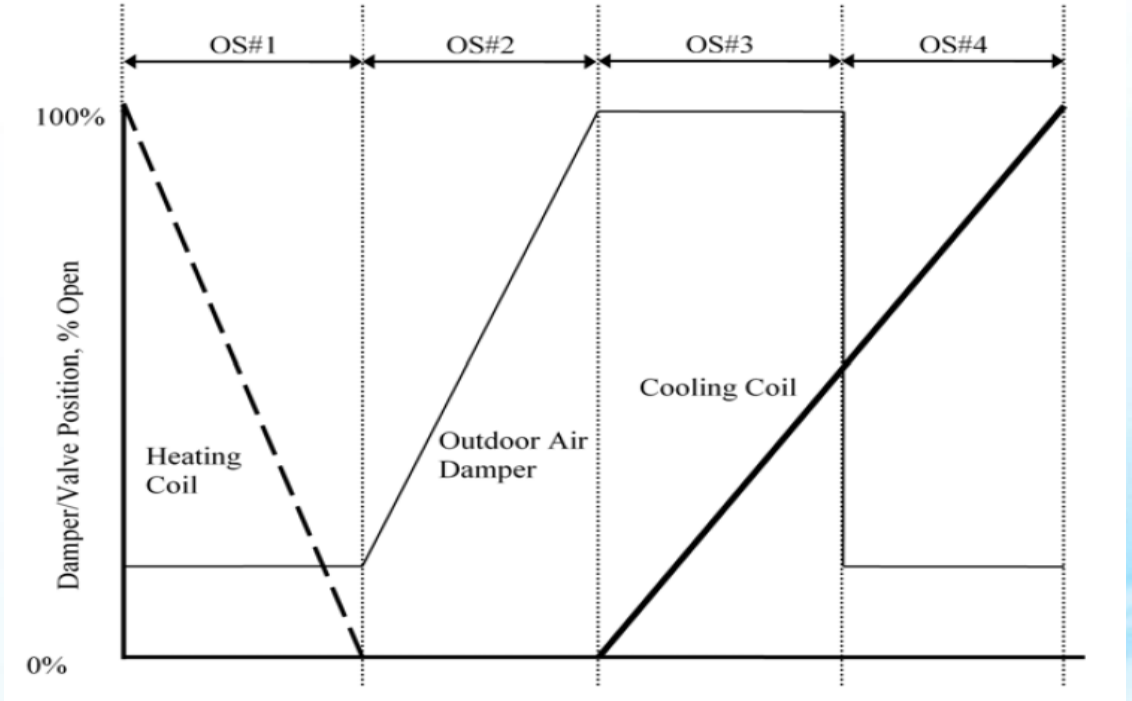

GENERAL ZONE LOGIC

General Zone Logic

- Temperature Setpoints
  - Every zone has occupied and unoccupied setpoints
    - Separate heating and cooling setpoints, minimum of 1˚F deadband
    - Setbacks based on occ sensor, window switch, and demand limiting
- Heating and Cooling control loop
  - Rules to limit windup

VAV Terminal Units

- Points lists, control diagrams and sequences of operation
- Dual max logic for Single duct with reheat
  - Requires DAT sensor
  - Improved comfort (ASHRAE RP-1515)
  - Lower Fan Energy
  - Lower Reheat Energy

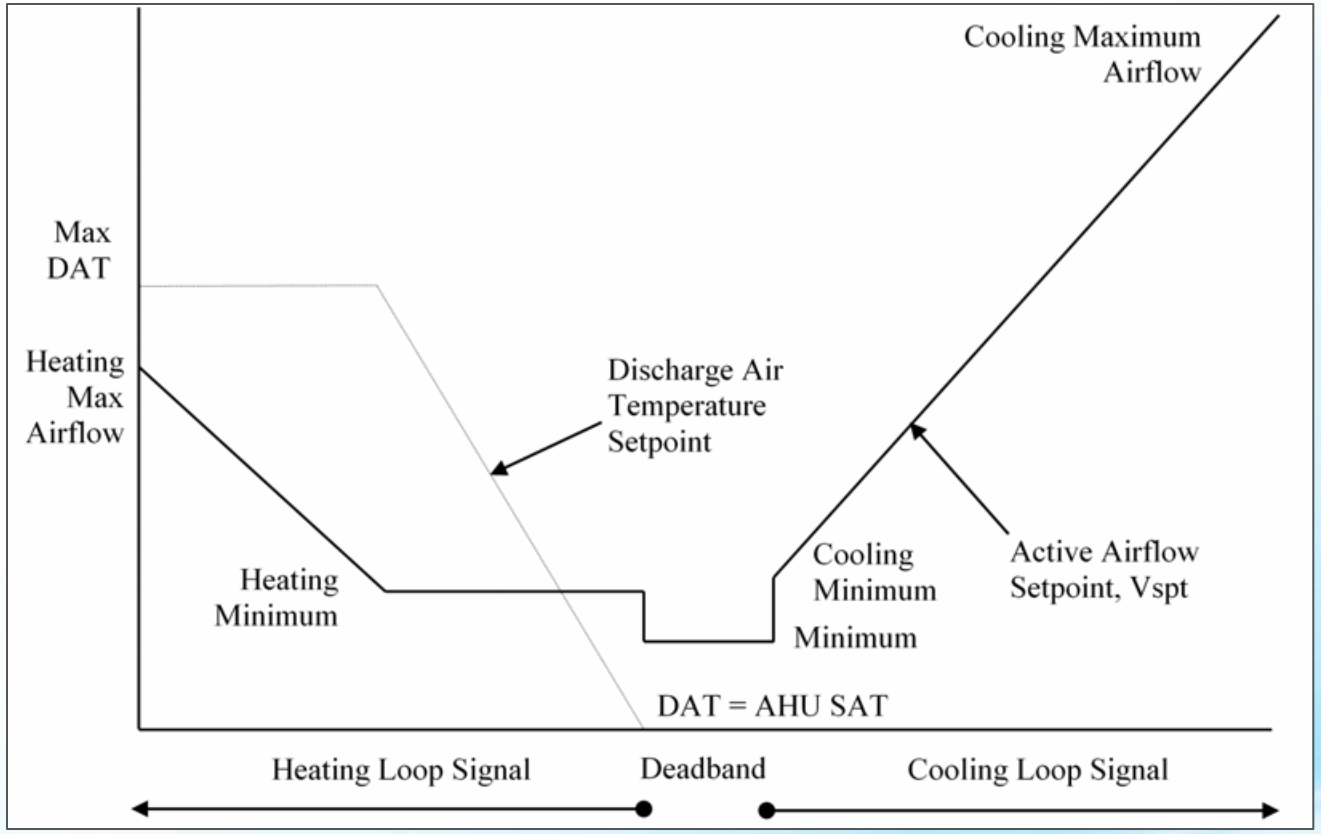

VAV AHU

- Outdoor air measurement/control options
  - Differential Pressure/AFMS on OA intake
  - AFMS on combined economizer/OA intake
- Building Pressure Options
  - Barometric (nonpowered) relief
  - Relief Fan
  - Return Fan
    - Controlled by building pressure or airflow tracking
    - Addenda proposed to improve airflow tracking sequence
- Minimum OA control options for ASHRAE 62.1 or Title 24 ventilation rules

VAV AHU

- Discharge air temperature setpoint must balance fan energy and compressor/chiller energy
- DAT setpoint trades fan energy against chiller energy:
  - Low DAT setpoint = more chiller energy, less fan energy
  - High DAT setpoint = less chiller energy, more fan energy
- To find a balance, sequence uses both, zone reset based on T/R, and OAT based linear reset
  - In cold weather, DAT setpoint is high so economizer is maximized
  - In warm weather, DAT setpoint is low to reduce fan energy

Special Case - DAT reset

- DAT setpoint must balance fan and compressor/chiller energy
  - Low DAT setpoint = more chiller energy, less fan energy
  - High DAT setpoint = less chiller energy, more fan energy
- To find a balance, sequence uses both, zone reset based on T/R, and OAT based linear reset

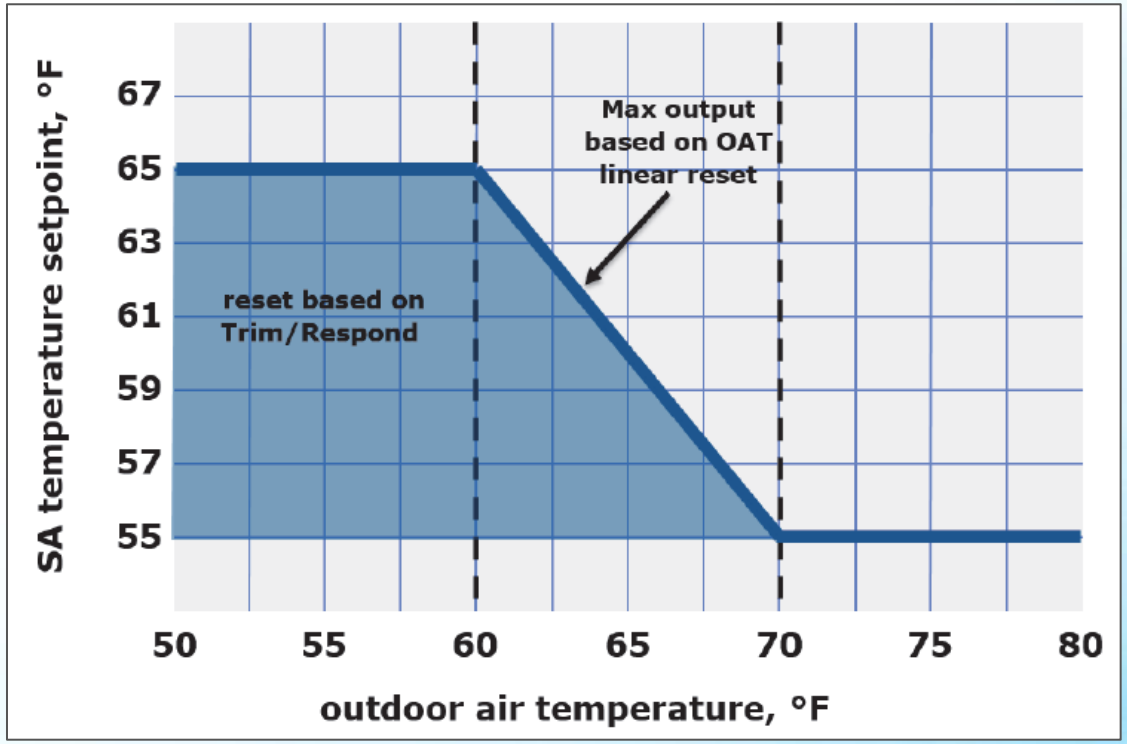

Guideline Future

- Continuous Maintenance
  - Several addenda have been proposed to fix some known issues with the guideline
  - Addition of sequences for hydronic systems (chilled water, hot water, steam)
  - Addition of functional tests to provide guidance for proving the sequences have been implemented

How engineers can specify GL 36

- Cut and Paste sections into specs, edit as needed
  - **Pros:** Engineer able to edit and provide desired SOOs
  - **Cons:** Difficult to edit .PDF; Time consuming; hard to track changes from original Guideline sequence

- Specify section number from Guideline along with any desired changes, Contractor to provide SOOs
  - **Pros:** Easier for Engineer; better tracking of changes
  - **Cons:** Contractor required to compile as-built SOOs

QUESTIONS?

Brenna Bolton
Systems Account Manager
512-712-6745
Brenna.Bolton@trane.com